GSASA Congress

Clinical case

Estel Engeler
MAS Hospital pharmacy
CHUV
10.11.2021

Conflicts of interest

- **Financial or property interests**

  None
- **Activities for the pharmaceutical industry and other healthcare companies**

  None
- **Funds provided by third parties / donations**

  None
- **Personal relationships**

  None
- **Other affiliations**

  None

Clinical case

87-year-old patient (160 cm, 44 kg) brought by her daughter due to a **decline in her general condition for 2 weeks** and describes herself **as very weak for 7 days**. She **has not eaten for 5 days** and **is hydrating very little**. She does not report fever or cardio-respiratory symptoms. On arrival, the patient is hemodynamically compensated, febrile and eupneic in ambient air. **A SARS-CoV-2 infection is retained**.

Active comorbidities

- Bipolarity disorder
- Hypothyroidism
- Chronic renal failure KDIGO G3b
- Gait and balance disorders with repeated falls
- Osteoporosis
- Arthrosis
- Hearing loss
- Unspecified history of bradycardia

Clinical case

Primary diagnosis

- SARS-CoV-2 infection

Secondary diagnosis

- Upper urinary tract infection with undetermined germ
- Acute renal failure (pre-renal origin)
- **Severe hypernatremia (177 mmol/L) at day 9**
- **Acute hypoactive confusional state**
- **Insufficiently substituted hypothyroidism**
- Urinary incontinence
- Undated left ankle sprain

Treatment the day of the medical visit

Day 19

Commercial name	INN	Galenic	Dosage	Route of administration
Calciparine® 5000 UI/0.2 mL	Heparin calcium	Injectable solution	1-0-1-0	SC
Glucose 5%	Glucose		Continously	IV
Eltroxine-LF® 0.05 mg	Levothyroxine	Tablet	1-0-0-0 fasting	PO
Lithiofor® 660 mg	Lithium	Extend release tablet	¼-0-¼-0	
Quétiapine XR 50 mg	Quetiapine		0-0-1-0/suspended	
Supradyn Energy®	Polyvitamines et minerals	Effervescent tablet	1-0-0-0	
Phosphate Sandoz® 500 mg	Sodium phosphate		1-0-1-0 /suspended	
Importal®	Lactitol	Solution	20 mL 1x/day	
Ensure Plus®	Lipids, carbon hydrates, proteins, minerals		200 mL 2x/day	
Reserve				
Dafalgan® 500 mg	Paracetamol	Tablet	1-1-1-1 max	PO
Quétiapine 25 mg	Quetiapine		½ 2x/day max if agitating	
Movicol®	Macrogols	Powder	1 bag 2x/day max	
Laxoberon® 7.5 mg/mL	Picosulfate	Solution	20 drops 1x/day max	
Distraneurin® 31.5 mg/mL	Clomethiazole		6 mL 1x/day max	
Resyl Plus®	Guaïfenesine & codeine		20 drops max 2x/day	
Importal®	Lactitol		0.45 mL max 1x/day	IR
Freka-Clyss®	Sodium mono- & di-hydrogen phosphate	Enema	Max. 1x/day	

Labs and vital parameters

Visit day

	Standards	D-1	D-2	D-5	D-9	D-10	D-11	D-13	D-16	D-17	D-18	D-19
Potassium	[3.5-4.6 mmol/L]	4	3,9	4,2	4,2	**3,3**	3,5	**3,2**	**5,5**	**5,2**	**4,8**	4,6
Calcium corr.	[2.10-2.50 mmol/L]		2,32									2,35
Magnesium total	[0.65-1.10 mmol/L]	0,95			**1,39**		**1,24**		0,88			0,95
Phosphate	[0.80-1.40 mmol/L]	0,83			**1,44**		**0,70**	**0,70**	0,94			1,05
Creatinine (Jaffé)	[44-80 micromol/L]	**111**	**100**	**108**	**202**	**153**	**145**	**105**	80	**81**	**88**	**86**
eGFR mL/min/1.73m2		38	44	40	19	26	28	41	57	56	51	52

Date	Blood pressure (systolic and diastolic)	Heart rate
During hospitalisation	BPS: **96-105** mmHg BPD: **63-78** mmHg	**67-79** bpm

Visit day

	Standards	D-0	D-1	D-2	D-4	D-9	D-10	D-11	D-12	D-13	D-14	D-15	D-16	D-17	D-18	D-19
Sodium	[135-145 mmol/L]		**147**	**147**	**153**	**177**	**168**	**156**	145	**151**	**149**	**146**	145	141	**148**	145
Osmolality (Blood)	[270-295 mmol/kg H2O]					**381**										**305**
Osmolality (Urine)	[50-1400 mmol/kg H2O]					488										394
Sodium (Urine) [mmol/L]	-		38			53								93		82
TSH	[0.270-4.20 mUI/l]			1,18												**10,9**
T4	[12.0-22.0 pmol/L]															**11,6**
Lithium	[Maintenance: 0.5-0.8 mmol/L Crisis: 0.8-1.2 mmol/L]	0,7				**0,9**			0,5	0,4	0,4			0,4		0,6

Reflexions in small groups (30’)

- What should you watch out for with a patient on Lithium? What needs to be monitored while on lithium?
- What symptoms presented by this patient are related to Lithium? Is lithium treatment appropriate?
- What are the alternatives for treating bipolar?
- How to manage hypernatremia in our case?
- What are your clinical propositions?

30 minutes of discussion in small groups

Reflexions in small groups

- **What should you watch out for with a patient on Lithium? What needs to be monitored while on lithium?**
- What symptoms presented by this patient are related to Lithium? Is lithium treatment appropriate?
- What are the alternatives for treating bipolar?
- How to manage hypernatremia in our case?
- What are your clinical propositions?

What should you watch out for with a patient on Lithium? What needs to be monitored while on lithium?

- Salts of Lithium and equivalence
- Renal function
- Interactions
- Lithium intoxication (TDM)
- Hypercalcemia & hyperparathyroidism
- Hypothyroidism
- Cardiac disorder
- Other: pregnancy & weight gain

Tondo, L. et al. Clinical use of lithium salts: guide for users and prescribers. Int J Bipolar Disord 7, 16 (2019). Calanca A. et al. Vade-Mecum de thérapeutique psychiatrique, Ed. Médecine et hygiene, 2011. Aubry J-M., et al. Psychopharmacologie des troubles bipolaires, Ed. Médecine et hygiene, 2013

Principal salts of Lithium and equivalence

Sel (nom commercial®)	sel (mg)*	lithium (mmol)**
sulfate (Lithiofor®)	660	12
acétate (Quilonorm®)	536	8.1
carbonate (Quilonorm® retard)	450	12.2
carbonate (Priadel retard®)	400	10.8
citrate (Litarex®)	564	6

Aubry J-M., et al. Psychopharmacologie des troubles bipolaires, Ed. Médecine et hygiene, 2013

Lithium - Renal function

- **Lithium**: Renal elimination ~90%.
  - Monitoring recommendation: **creatinine** before treatment and at least 1-2x/year.
- Renal function adaptation?
  - According to **blood concentrations of lithium** (TDM) & **clinical state**.
  - CrCl < 30 mL/min: **Avoid use**

UpToDate 2021

Lithium - Interactions

Medication class	Effect on lithium concentration[a]	Risk rating[b]	Comment
Diuretics			
Thiazides	↑↑	D	
Loops	↑–↑↑	C	↑ Risk if elderly, medical co-morbidities
K+ sparing	No effect	A	
Osmotic	↓↓↓	C	
Methyl xanthine	↓↓↓	C	
ACE inhibitors	↑↑	D	Delayed toxicity; ↑ risk if elderly
ARBs	↑	C	
NSAIDs	↑–↑↑	C	Variable effects; caution with all
Antidepressants	No effect	B	Rare 5-HT syndrome
Antipsychotics	No effect	B	Rare neurotoxicity
AEDs	No effect	B	Rare neurotoxicity with carbamazepine
Neuromuscular blockers	No effect	C	Prolonged neuromuscular blockade
Calcium channel antagonists (blockers)	No effect	C	↑ Intracellular lithium (?)

AEDs antiepileptic drugs, *ARBs* angiotensin II receptor antagonists (blockers), NSAIDs non-steroidal anti-inflammatory drugs

[a] Impact on lithium concentrations: ↑ (0–20 %); ↑↑ (20–40 %); ↑↑↑ (40–60 %); ↑↑↑↑ (>60 %); ↓↓↓ (40–60 %)

[b] Risk rating adapted from Lexi-interact data fields [185]; see Table 2

Finley, Patrick R. "Drug Interactions with Lithium: An Update." *Clinical Pharmacokinetics* 55 (2016): 925-941.

Lithium intoxication

- Lithium toxicity may include **weakness, tremor, mild ataxia, tinnitus, nausea, and diarrhea**.

- More significant toxicity may result in **vomiting, gross/coarse tremor, slurred speech, confusion, nystagmus disorder, dysarthria, and lethargy**. If not treated, it may lead to seizure, coma, neurological damage, and death.

Blood concentrations of lithium usually **above 1.5 mEq/L**, may lead to increased adverse reactions and toxicity

UpToDate 2021

Lithium monitoring - Preventing adverse effect/intoxication

- Blood concentrations of lithium (TDM) usually at maintenance: **0.50 – 0.80 mEq/L** and mania**: 0.80-1.20 mEq/L.**
  - 1 week after the first dose, then weekly in the first month, at least once a month in the next 3–6 months, and every 3–6 months thereafter.

- Use in **the elderly at ages over 60 years**, doses and blood levels of lithium are at the low end of the therapeutic range (e.g., maintenance: **0.40–0.60 mEq/L**).
  - **Undesirable effects in the elderly can include**: **confusion or worsening of cognitive functions**, unsteady balance (ataxia), restless movements (akathisia), **declining kidney function**, **hypothyroidism.**

Tondo, L. et al. Clinical use of lithium salts: guide for users and prescribers. Int J Bipolar Disord 7, 16 (2019). Calanca A. et al. Vade-Mecum de thérapeutique psychiatrique, Ed. Médecine et hygiene, 2011. Aubry J-M., et al. Psychopharmacologie des troubles bipolaires, Ed. Médecine et hygiene, 2013

Lithium- Hypercalcemia & hyperparathyroidism

- **hyperparathyroidism** has been reported with lithium treatment, which leading to drug induced **hypercalcemia**. Symptoms may include **weakness, development of renal stones (calculi), osteoporosis, GI distress** and **depression.**
  - Changes are usually reversible if lithium is discontinued.
  - *Possible mechanism*: Lithium thought to **inhibit calcium receptors in the parathyroid gland**, preventing inhibition of parathyroid hormone (PTH) release. As PTH levels rise, this alters calcium homeostasis leading to hypercalcemia
  - Monitoring recommendation: **Calcium** and **PTH** before treatment and at least 1-2x/year

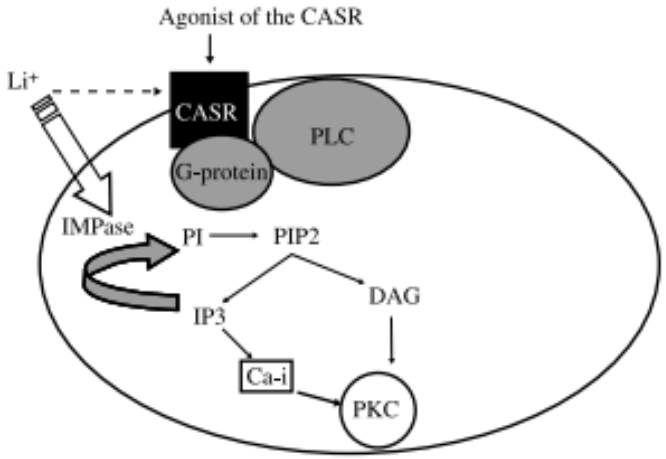

Meehan AD et al. Lithium-Associated Hypercalcemia: Pathophysiology, Prevalence, Management. World J Surg. 2018;42(2):415-424. Szalat A, Maze H, Freund HR. Lithium-associated hyperparathyroidism: report of four cases and review of the literature. *Eur J Endocrinol.* 2009;160:317–323. UpToDate 2021

Lithium- Hypothyroidism

- Lithium treatment has been associated with **hypothyroidism**.
  - *Symptoms*: lethargy, impaired cognition, weight gain, dry skin, and cold intolerance.
  - *Mechanism*: inhibition of iodine uptake in the thyroid and inhibition of thyroid hormone synthesis and release.
  - Monitoring recommendation: **T4, T3** and **TSH** before treatment and 1-2x/year

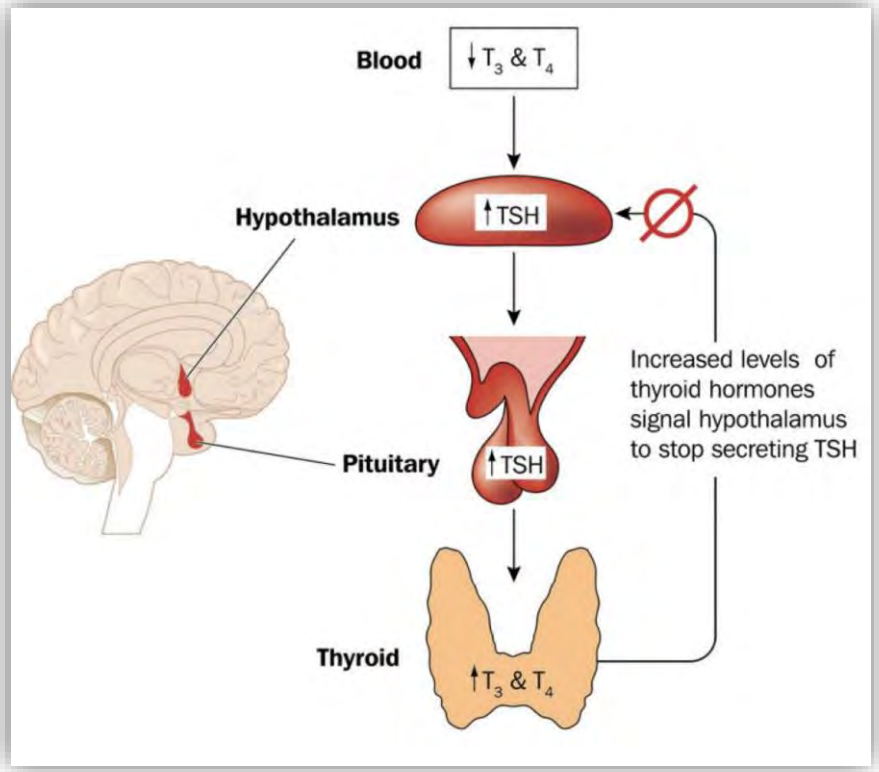

UpToDate 2021. Tondo, L. et al. Clinical use of lithium salts: guide for users and prescribers. Int J Bipolar Disord 7, 16 (2019). Calanca A. et al. Vade-Mecum de thérapeutique psychiatrique, Ed. Médecine et hygiene, 2011. Aubry J-M., et al. Psychopharmacologie des troubles bipolaires, Ed. Médecine et hygiene, 2013

Lithium – Cardiac disorder

- Lithium may cause **cardiac arrhythmia**, including **bradycardia**, sinoatrial dysfunction (SA block), **abnormal T waves on ECG** (T-wave inversion). Additional cardiovascular affects have occurred, including peripheral **edema**, **hypotension**, and cardiovascular collapse.
- *Mechanism:* Dose-dependent; affects Na/K channels in the myocardium and leads to decreased intracellular potassium levels.
  - Monitoring recommendation: **ECG** before Lithium treatment.

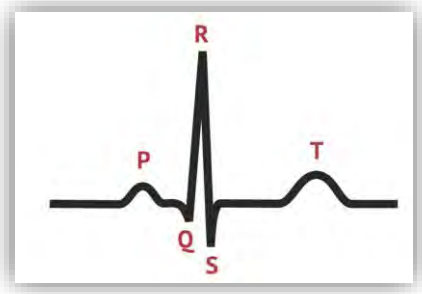

Li

UpToDate 2021. Mehta N, Vannozzi R. Lithium-induced electrocardiographic changes: a complete review. *Clin Cardiol*. 2017;40(12):1363-1367. Aubry J-M., et al. Psychopharmacologie des troubles bipolaires, Ed. Médecine et hygiene, 2013

Lithium – Pregnancy and weight gain

- **Pregnancy**: Not indicated due to the effects of lithium on the fetal heart.
  - Recommendation: **pregnancy test** before starting the treatment.

- **Weight monitoring**: regularly.
  - Weight gain on lithium would be 10 kg over 10 years in 67% of patients.

Zimmermann U, Kraus T, Himmerich H, . Epidemiology, implications and mechanisms underlying drug-induced weight gain in psychiatric patients. J Psychiatr Res 2003;37:193–220. UpToDate 2021. Consulted 10.2021: https://lecrat.fr/spip.php?page=article&id_article=360

Lithium – Monitoring resume

- *Blood levels:* creatinine (for kidney function), sodium, potassium, calcium, thyroid (TSH, T4, T3) and parathyroid hormones (PTH) should be measured **before starting** the treatment and at least, **once or twice a year** thereafter
- *Blood concentrations of lithium*: 1 week after the first dose, then weekly in the first month, at least once a month in the next 3–6 months, and every 3–6 months thereafter. maintenance: **0.50 – 0.80 mEq/L** and mania**: 0.80-1.20 mEq/L**
- **Weight**, **ECG** (and **EEG**)
- **Pregnancy test** before starting treatment

Reflexions in small groups

- What should you watch out for with a patient on Lithium? What needs to be monitored while on lithium?
- **What symptoms presented by this patient are related to Lithium? Is lithium treatment appropriate?**
- What are the alternatives for treating bipolar?
- How to manage hypernatremia in our case?
- What are your clinical propositions?

Neurotoxicity - *SILENT*

TABLE 3. SILENT Clinical Profile

Typical presentations

1. Persistent cerebellar dysfunction
2. Persisting extrapyramidal syndromes
3. Persisting brainstem dysfunction
4. Dementia with varying degrees of organic mental syndromes

Presentation	Ref.
Atypical Presentations	
Downbeat nystagmus	39
Retrobulbar optic neuritis	40
Persistent papilledema	41
Choreoathetoid movements	31, 50
Peripheral neuropathy (both motor and sensory)	43, 44, 67, 113
Myopathy	64
Blindness (due to central pontine myelinolysis)	99

- Side effect: « Rare ».
- Symptoms: Intoxication Lithium without GI effects.
- **Risk factors**:
  - Age
  - Women
  - Dose and serums level
  - Drug combination (ex: Lithium and haloperidol)

Possible with therapeutical serum level!

- SILENT diagnostic ➔ **Lithium discontinuation.**

UpToDate 2021

Adityanjee and al. The Syndrome of Irreversible Lithium-Effectuated Neurotoxicity Clin Neuropharmacol 2005;28:38–49

Nephrogenic Diabetes Insipidus and Hypernatremia

- **Nephrogenic diabetes insipidus (NDI)**: the ability of the kidney to retain free water may become impaired, leading to dehydration and electrolyte disturbances, most notably **hypernatremia**.
  - Chronic lithium intake is one of the most common causes of nephrogenic diabetes insipidus and affects up to **40% of patients treated**.
  - ***Symptoms of NDI, related to hypernatremia***: polyuria, polydipsia, lethargy, and irritability, may progress to muscle twitching, coma, seizures, and death.
  - *Mechanism*: **Dose- and duration-related**. Lithium reduce aquaporin-2 water channels within the collecting duct, causing reduction of water reabsorption.
  - NDI diagnostic ➔ **Lithium discontinuation**

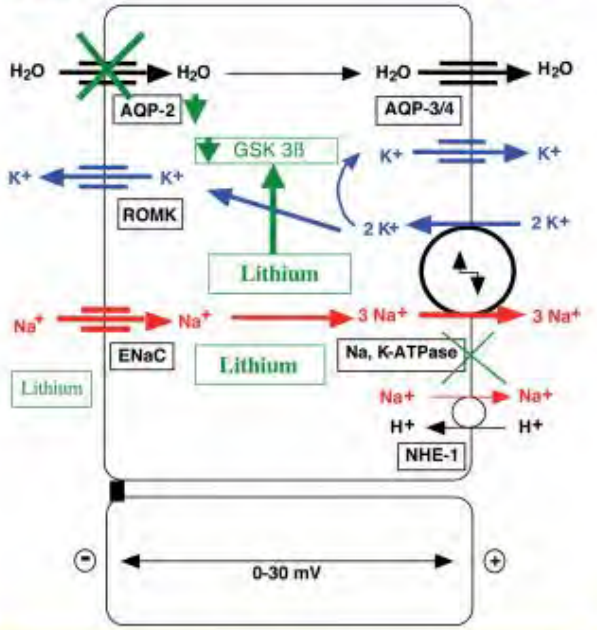

Figure 1. Schéma d'une cellule principale (tube collecteur cortical)

La cellule principale est impliquée dans le transport croisé du Na et du K et la réabsorption d'eau par les aquaporines sous le contrôle de la vasopressine. Au pôle apical, le Na entre passivement par le canal sodique épithélial ENac (voie également empruntée par le lithium qui se substitue au Na) alors que le K ressort passivement par le canal potassique ROMK1 (renal outer medulla potassium channel). Le lithium ne pouvant pas ressortir s'accumule dans la cellule inhibant la fonction de GSK3β. L'inhibition de GSK3β diminue la quantité d'aquaporines 2 sur la membrane apicale et entraîne une baisse de la réabsorption d'H_2O, indépendamment de la vasopressine. Cette baisse du nombre de canaux hydriques est responsable du diabète insipide néphrogénique.

Rev Med Suisse 2010; 6 : 448-52
UpToDate 2021

Hypothyroidism

- Side effect: « frequent »
- Substitution treatment: **L-thyroxine**
  - Adult: 1.4-1.6 µg/kg/j
  - Elderly: 1 µg/kg/j
- TSH, T4, T3 monitoring after 2 months of treatment
- Lithium discontinuation **not necessary**

- *In our case*: Dose L-thyroxine increased or lithium discontinuation due to SILENT and possible NDI

TSH [0.270-4.20 mUI/l]	T4 [12.0-22.0 pmol/L]
10.9	11.6

UpToDate 2021
Rev Med Suisse 2010 ; 6 : 2306-11
Rev Med Suisse 2009 ; 5 : 758-62

Bradycardia and hypotension

Date	Blood pressure (systolic and diastolic)	Heart rate
During hospitalisation	BPS: **96-105** mmHg BPD: **63-78** mmHg	**67-79** bpm

- *Cause*: Hypothyroidism? Lithium induced hypothyroidism?
- *Mechanism*: Possibly due to hypothyroidism but still unclear.
- *Treatment*: **L-thyroxine** adjustment?
- **Lithium discontinuation?**

Aubry J-M., et al. Psychopharmacologie des troubles bipolaires, Ed. Médecine et hygiene, 2013.
Oudit GY et al. Lithium-induced sinus node disease at therapeutic concentrations: linking lithium-induced blockade of sodium channels to impaired pacemaker activity. *Can J Cardiol*. 2007;23(3):229-232.

Reflexions in small groups

- What should you watch out for with a patient on Lithium? What needs to be monitored while on lithium?
- What symptoms presented by this patient are related to Lithium? Is lithium treatment appropriate?
- **What are the alternatives for treating bipolar?**
- How to manage hypernatremia in our case?
- What are your clinical propositions?

What are the alternatives for treating bipolar?

Bipolar disorder – Treatment efficacy
Evidence base

- Mania
- Depression
- Relapse prevention (Mania/Depression)

Médication	Dépression	Manie	Prévention des récidives
lithium	++	++	++
valproate	?	++	+
lamotrigine	?	–	++
carbamazépine	+	++	+
gabapentine	?	–	–
topiramate	?	–	?
aripiprazole	–	++	++
olanzapine	++	++	++
rispéridone	+	++	?
quétiapine	++	++	++
lurasidone	++	?	?
asénapine	?	++	++

Gold standard

Alternatives for the 3 parameters

Aubry J-M., et al. Psychopharmacologie des troubles bipolaires, Ed. Médecine et hygiene, 2013
Bauer MS. How solid is the evidence for the efficacy of mood stabilizers in bipolar disorder? Essent Psychopharmacol. 2005;6(6):301-18.

Reflexions in small groups

- What should you watch out for with a patient on Lithium? What needs to be monitored while on lithium?
- What symptoms presented by this patient are related to Lithium? Is lithium treatment appropriate?
- What are the alternatives for treating bipolar?
- **How to manage hypernatremia in our case?**
- What are your clinical propositions?

Firstly search the cause…

Diagnosis depending on

- **Clinical criteria** (blood pressure, edema, etc.)
- **Volume state**

Table 2. Causes of Hypernatremia

Cause	Proximate Cause	Findings Supporting Diagnosis
Inadequate water intake	Lack of access to water	• Altered sensorium, immobility, endotracheal intubation • Chronic care facility residence • Fluid prescription that does not take into account insensible losses • U_{Osm} > 600 mOsm/kg H_2O
Extrarenal hypotonic fluid loss	GI losses or perspiration	• History of diarrhea, febrile illness, gastric suction, or enteric fistula • U_{Osm} > 600 mOsm/kg H_2O
Renal concentrating defect	Diuretics	• History of loop diuretic use • Isosthenuric urine
	Osmotic diuresis	• Hyperglycemia with glucosuria • Urea-induced osmotic diuresis • Isosthenuric urine (eg, recovery from ATN)
	Central diabetes insipidus	• Presence of brain trauma, surgery, tumor, infiltrative disease, or infection including tuberculosis • Maximally or submaximally dilute urine • Persistently dilute urine during water deprivation test • Low copeptin levels • U_{Osm} increases in response to desmopressin
	Nephrogenic diabetes insipidus	• Treatment with lithium or demeclocycline, hypercalcemia, hypokalemia, renal tubulointerstitial disease, especially sickle cell nephropathy and obstructive uropathy • U_{Osm} < 300 mOsm/kg H_2O • Persistently dilute urine during water deprivation test • High copeptin levels • U_{Osm} fails to increase in response to desmopressin
Excessive salt intake	Hypertonic fluid administration	• Receipt of hypertonic sodium bicarbonate solution during cardiac arrest or hypertonic saline solution • History of dilution error for powdered feeding formulas in infants • Administration of TPN or concentrated enteral tube feeds • U_{Osm} > 600 mOsm/kg H_2O • U_{Na} > 100 mEq/L

Note: Even if not specifically noted, impaired thirst or access to water is typically also present.
Abbreviations: ATN, acute tubular necrosis; GI, gastrointestinal; TPN, total parenteral nutrition; U_{Na}, urine sodium concentration; U_{Osm}, urine osmolality.

Am J Kidney Dis. 75(2): 272-286.

Treatment of hypernatremia

Table 2. Differential Diagnosis and Treatment of Hypernatremia

Condition	*Diagnosis*	*Treatment*
Hypovolemic hypernatremia		
Body fluid loss (e.g., burns, sweating)	Clinical	Free water replacement
Diuretic use	Clinical	Stop diuretic
Gastrointestinal loss (e.g., vomiting, diarrhea, fistulas)	Clinical	Free water replacement
Heat injury	Elevated temperature, myoglobinuria, elevated creatinine level	Intravenous fluids, supportive care
Osmotic diuresis (e.g., hyperosmolar nonketotic coma, mannitol use, enteral feeding)	Elevated glucose level; sodium level often elevated after correction	Correct glucose level, stop causative agent
Post-obstruction	Clinical	Supportive care
Euvolemic hypernatremia		
Central diabetes insipidus	Clinical history of central nervous system insult; urinary concentration after administration of desmopressin	Treatment is rarely required unless thirst is impaired
Fever	Clinical	Treat underlying cause
Hyperventilation/mechanical ventilation	Clinical	Adjust ventilation
Hypodipsia	Clinical	Increase free water consumption
Medications (e.g., amphotericin, amino-glycosides, lithium, phenytoin [Dilantin])	Medication review	Stop causative medication
Nephrogenic diabetes insipidus	History of nephrotoxic medication use (amphotericin, demeclocycline [Declomycin], foscarnet, lithium, methoxyflurane), failure to concentrate urine after administration of desmopressin	Stop causative medication
Sickle cell disease	Hemoglobin electrophoresis	Treat underlying disease
Suprasellar and infrasellar tumors	Magnetic resonance imaging	Treat underlying disease
Hypervolemic hypernatremia		
Cushing syndrome	24-hour urinary cortisol and adrenocorticotropic hormone levels, dexamethasone suppression test	Treat underlying disease
Hemodialysis	Clinical history	Treat underlying disease
Hyperaldosteronism	History of hypertension and hypokalemia, plasma aldosterone-to-renin ratio,[3] history of hypertension and hypokalemia	Treatment usually not needed for hypernatremia
Iatrogenic (e.g., salt tablet or salt water ingestion, saline infusions, saline enemas, intravenous bicarbonate, enteral feedings)	Recent administration of hypertonic saline, enteral feedings, sodium bicarbonate infusion, or hypertonic dialysis	Stop causative medication, rapid free water replacement

Information from references 3, 12, 33, and 34.

Am Fam Physician. 2015 Mar 1;91(5):299-307.

In our case..

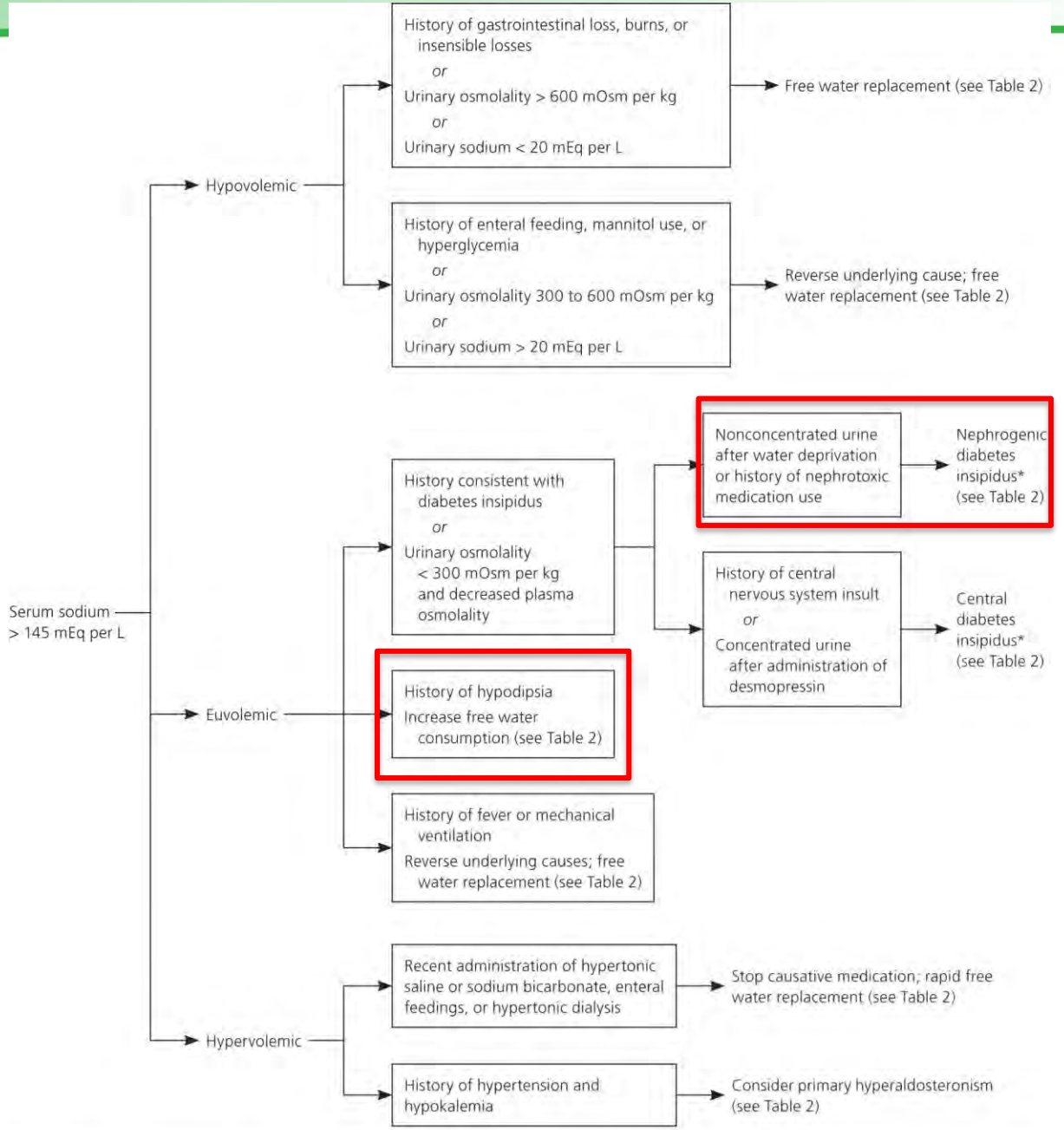

*—The diagnosis of diabetes insipidus usually requires a combination of water deprivation and a trial of desmopressin. With water deprivation, patients with diabetes insipidus will have increased plasma osmolality but not urinary osmolality. In patients with central diabetes insipidus, urinary osmolality will increase by approximately 200 mOsm per kg after receiving desmopressin.[35]

Am Fam Physician. 2015 Mar 1;91(5):299-307.

In our case

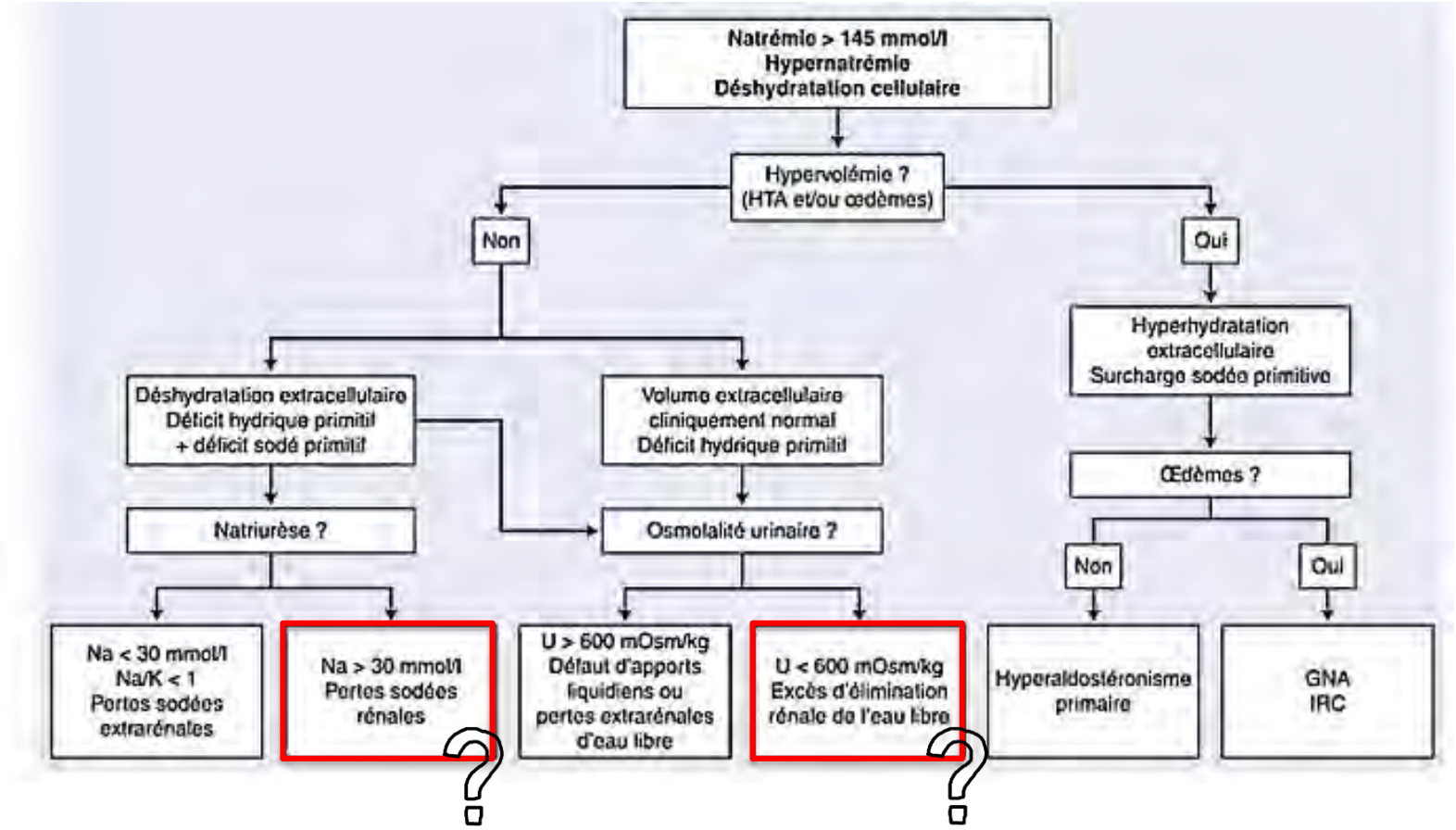

Osmolality (Urine) [50-1400 mmol/kg H2O]	Sodium (Urine) [mmol/L]
394	82

T. Petitclerc /Néphrologie & Thérapeutique 9 (2013) 38–49

Free water deficit

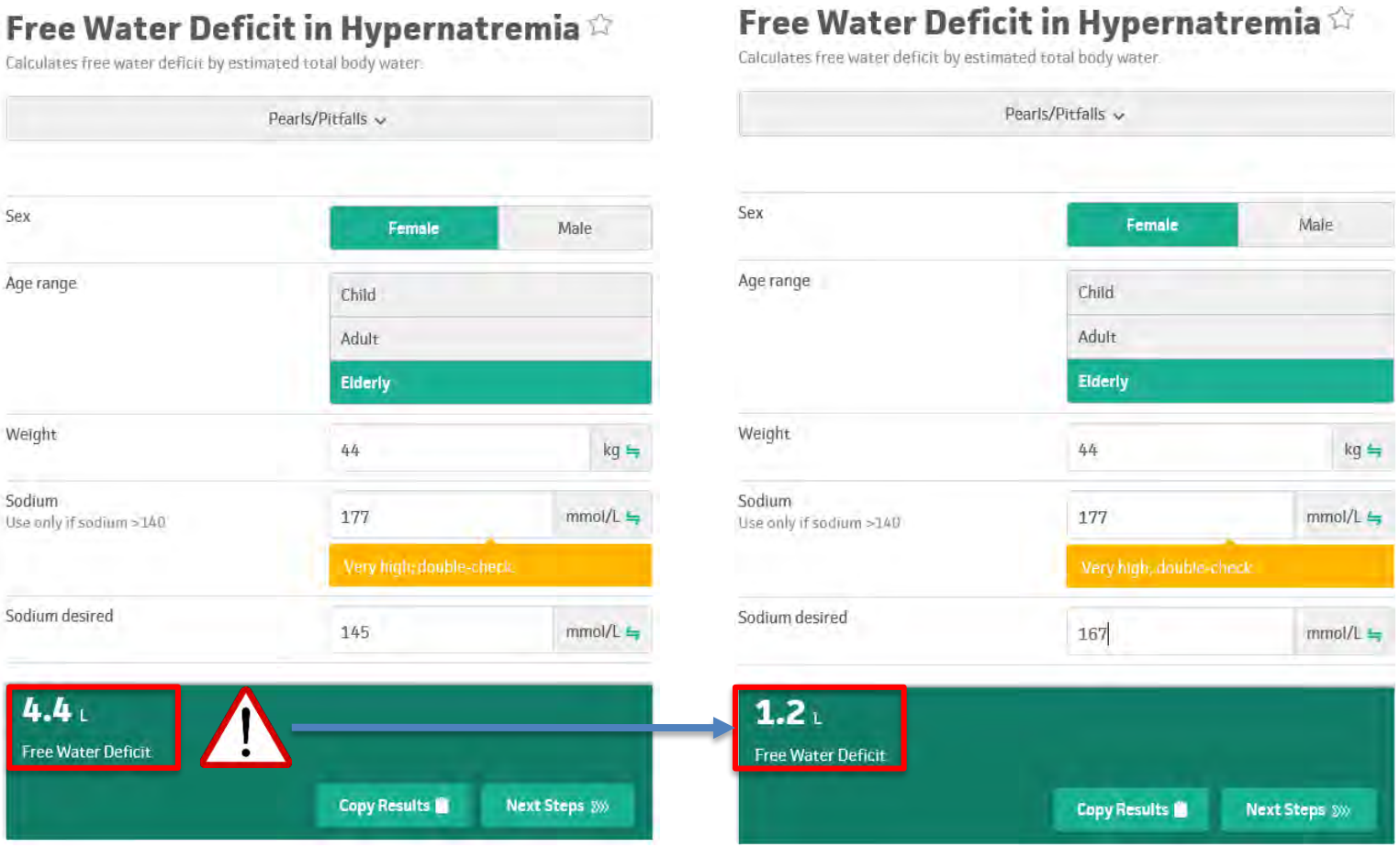

https://www.mdcalc.com/free-water-deficit-hypernatremia
T. Petitclerc /Néphrologie & Thérapeutique 9 (2013) 38–49
Rev Med Suisse 2010; 6 : 444-7

Basic rules

- Natremia correction: decreasing by **10 mmol/L per 24h max.** ➔ reduces the risk of cerebral edema and seizures associated with rehydration
- Natremia monitoring **every 4-6h**

Treatment starting with:

G5% 1.0-1.5L i.v. 24h.

Adjusted volume depending on natremia results

Nephrogenic Diabetes Insipidus

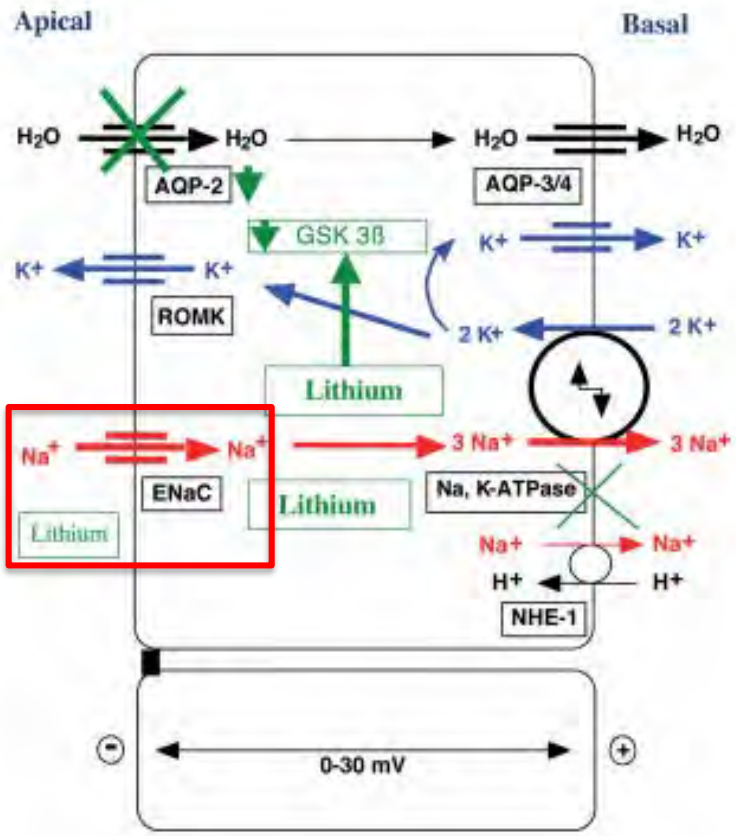

- **Lithium discontinuation**
- Thiazide diuretic: **hydrochlorothiazide 25 mg po/day**
  ↓ Sodium (cotransporter NaCl) reabsorption
  ↑ Water reabsorption (↑ Aquaporine 2 expression)

- **And/or**

- **Amiloride 5-10 mg po/d**: inhibits ENaC canal ➔ ↓ intracellular Lithium (<u>not in CH</u>)

Rev Med Suisse 2010; 6 : 448-52

Reflexions in small groups

- What should you watch out for with a patient on Lithium? What needs to be monitored while on lithium?
- What symptoms presented by this patient are related to Lithium? Is lithium treatment appropriate?
- What are the alternatives for treating bipolar?
- How to manage hypernatremia in our case?
- **What are your clinical propositions?**

Clinical propositions

- **Discontinuation Lithium**:
  - Inappropriate dosing: ¼-0-¼-0
  - SILENT and possible NDI (even if therapeutical serum levels)
  - **Alternatives**: Quetiapine? Olanzapine?
- Hypothyroidism correction: **Increased or maintained dose of L-thyroxine** even if lithium discontinuated (thyroid regulation 4-8 weeks)
- **Importal IR**? Why? Inappropriate especially due to clinical state.
- Hypernatremia: **Phosphate eff.** (suspended) **sodium intake** (1g NaCl) **!**

Catamnesis

- Lithium discontinuated: **Delirium improvement**
- If mania: **valproate** 300 mg/d, increased up to 600 mg/d
- Prevention mania/depression: **Maintained quetiapine**
- Hypernatremia: NDI excluded ➔ **dehydratation**: hypodypsia and infections (SARS-CoV-2 and upper urinary tract infection)

Thank you for your attention!